Laboratory Exercise 2

For the Bachelor of Science course Digital Circuits.

Introduction

This laboratory exercise serves the purpose of building an adder circuit with discrete basic logic gates. First, you need to prepare your own schematic versions of these circuits. The schematics needs to be confirmed by P-Spice simulation before coming to the laboratory. In the lab, you are free to pick any basic logic gates you may need to implement your adder circuit on the breadboard (AND, NAND, OR, NOR, NOT, XOR). It is recommended to control the input of the circuit with a DIP-switch and connect the output to LED's for confirming output logic. Next, we add a BCD-decoder and a 7-segment display to visually show the output. Simulation of the BCD-decoder is optional but show the experimental results by adding a column in your truth table to record the shown digit on the 7-segment display.

As part of the exercise, it is expected that the findings discovered through the laboratory work be documented in a report (data/calculations/simulations/measurement results/pictures/etc.), where the front-page must contain the course name, date, student names and ID numbers of the group members. When drawing schematics, remember to add all used connection which includes supply (VDD and GND).

Exercise Tasks

1. **Design** a 2-bit adder using two full adders complete with carry-in (Cin) and carry-out (Cout) functionality and **simulate** the 2-bit adder in P-Spice. (Should be done before coming to the lab.)
2. **Implement** the 2-bit adder on the breadboard and experiment with it, testing all input configurations and comparing the results with theory and simulation. It is recommended to use an 8-bit DIP-switch for the input, and output connected to 3 LEDs to confirm the binary results. See Figure 1 for a sketch on the circuit to be designed.
3. Connect the output with carry-out of the 2-bit adder to a 7-segments display driver to display the output digit on a 7-segment display. (The designed adder will only have a 3-bit output, so just ground the fourth bit (MSB) of the display driver input. See further hints below under Component notes.)

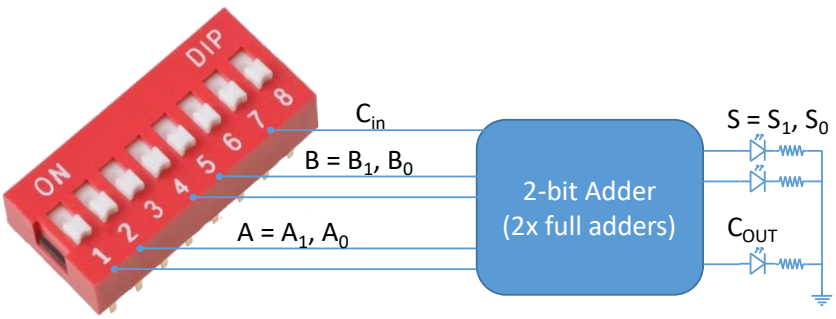

Figure 1 Principal circuit to be build containing the adders, using a DIP-switch for inputs and LEDs for output. (You can swap the order of the switches as needed; this figure is just an example setup.)

Component notes

You are free to select any standard gates as needed for the design of the adders.

<u>BCD Decoder and 7-segments Display:</u> BCD Decoder **74SL47** converts 4-bit binary to 7-bit output to drive a 7-segment **Common Anode** Display to display a digit. The truth table of the 74SL47 can be seen in Figure 2.

Inputs							Outputs							
D	C	B	A	$\overline{BI}/\overline{RBO}$	$\overline{RBI}$	$\overline{LT}$	$\overline{a}$	$\overline{b}$	$\overline{c}$	$\overline{d}$	$\overline{e}$	$\overline{f}$	$\overline{g}$	Display
0	0	0	0	1	1	1	0	0	0	0	0	0	1	
0	0	0	1	1	1	1	1	0	0	1	1	1	1	
0	0	1	0	1	1	1	0	0	1	0	0	1	0	
0	0	1	1	1	1	1	0	0	0	0	1	1	0	
0	1	0	0	1	1	1	1	0	0	1	1	0	0	
0	1	0	1	1	1	1	0	1	0	0	1	0	0	
0	1	1	0	1	1	1	1	1	0	0	0	0	0	
0	1	1	1	1	1	1	0	0	0	1	1	1	1	
1	0	0	0	1	1	1	0	0	0	0	0	0	0	
1	0	0	1	1	1	1	0	0	0	1	1	0	0	
1	0	1	0	1	1	1	1	1	1	0	0	1	0	
1	0	1	1	1	1	1	1	1	0	0	1	1	0	
1	1	0	0	1	1	1	1	0	1	1	1	0	0	
1	1	0	1	1	1	1	0	1	1	0	1	0	0	
1	1	1	0	1	1	1	1	1	1	0	0	0	0	
1	1	1	1	1	1	1	1	1	1	1	1	1	1	

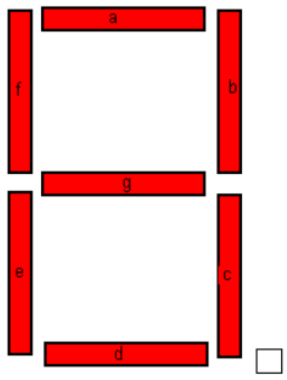

Figure 2 Truth table of a 74SL47 BCD Decoder.

To display a 4-bit value in the 7-segments display, the 74SL47 and the 7-segment display need to be connected as shown in the following schematic in Figure 3, where A, B, C, and D, are digital bits to be displayed on the Common Anode Display. Remember that the display segments consist of individual LEDs, so chose the resistor values R with caution to prevent damaging components.

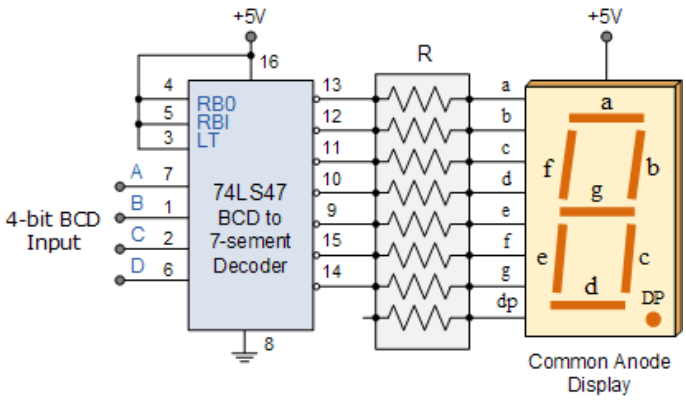

Figure 3 Example schematic of the 74LS47 BCD Decoder setup to drive a Common Anode 7-segment Display.

The deadline for hand in of the report can be seen on Bright Space, where you also upload your report.